## Inlet nozzle for centrifugal fan and splash proof centrifugal fan

DC

Nozzle mounted in fan inlet side to adjust the flow of introduced air. Material: Steel sheet

### Dimensions (unit : mm)

### ϕ150mm type

Model : 109-1081 Surface treatment : Electro nickel plating (silver) Color
: 109-1081H : Cation electropainting (black)

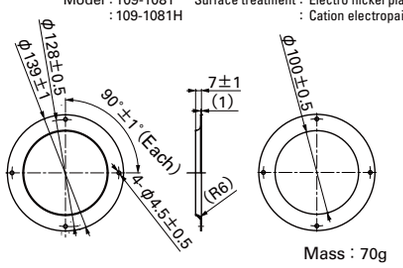


Mass : 70g

### Mounting example
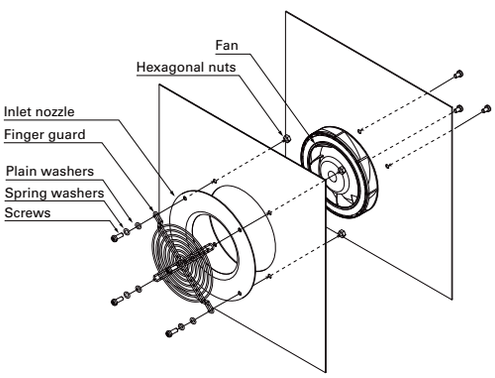
Centrifugal fan