DRAWING MADE IN THIRD ANGLE PROJECTION

THIS DRAWING IS UNPUBLISHED. RELEASED FOR PUBLICATION ,19 .

© COPYRIGHT 19 BY AMP INCORPORATED. ALL INTERNATIONAL RIGHTS RESERVED.

LOC	DIST	P	F
GP	0		

REVISIONS

ZONE	LTR	DESCRIPTION	DATE	APPD
	F	RLSD -2 ; EC 0S11-0234-03	16DEC03	JB / BK

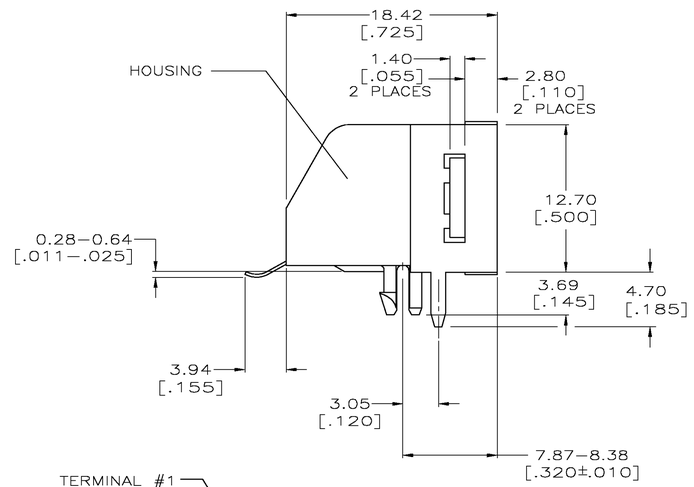

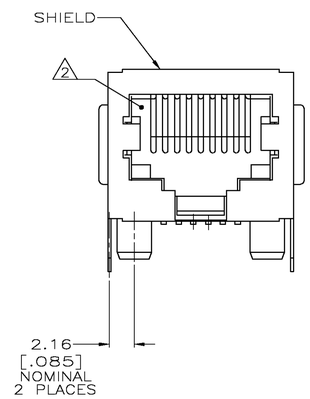

1. MATERIAL: HOUSING – HTN MOLDING COMPOUND, 94 VO, BLACK.
   TERMINAL– 0.36 [.014] THICK PHOS–BRONZE PLATE WITH 1.27μm [.000050] THICK HARD GOLD IN LOCALIZED GOLD PLATE AREA AND 3.81μm [.000150] THICK TIN–LEAD IN SOLDER AREA OVER 1.27μm [.000050] THICK NICKEL UNDERPLATE.
   SHIELD– 0.25 [.010] THICK COPPER ALLOY, PLATE WITH 2.03μm [.000080] THICK TIN–LEAD.

2. CAVITY CONFORMS TO FCC RULES AND REGULATIONS, PART 68, SUBPART F.

3. DIMENSIONS ARE MAXIMUM UNLESS OTHERWISE SPECIFIED.

4. SNAP–IN RETENTION FEATURE ACCOMMODATES 1.44–1.71 [.062±.005] THICK PRINTED CIRCUIT BOARD.

5. PACKAGING TAPE AND REEL: (PER EIA 481 SPECIFICATION)
   TAPE: 44 [1.73] WIDE
   POCKET DEPTH: 17.65 [.695]
   POCKET PITCH: 32 [1.26]
   CLEAR PSA TAPE TRAILER 160 [6.30] MIN LENGTH
   PLASTIC REEL DIA. 330 [13.0]
   PIECES PER REEL: 100

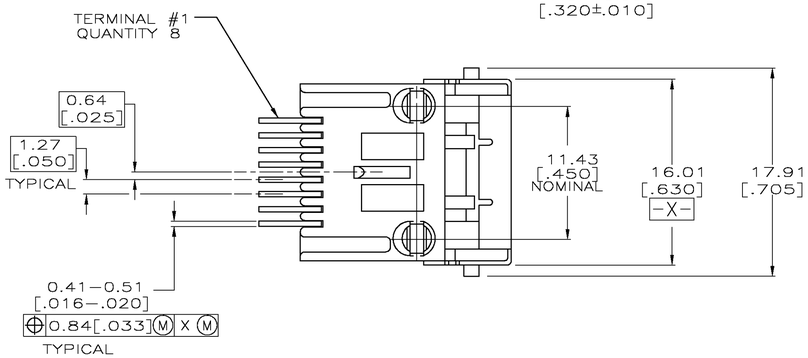

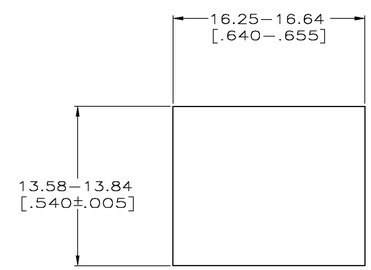

RECOMMENDED PANEL CUTOUT

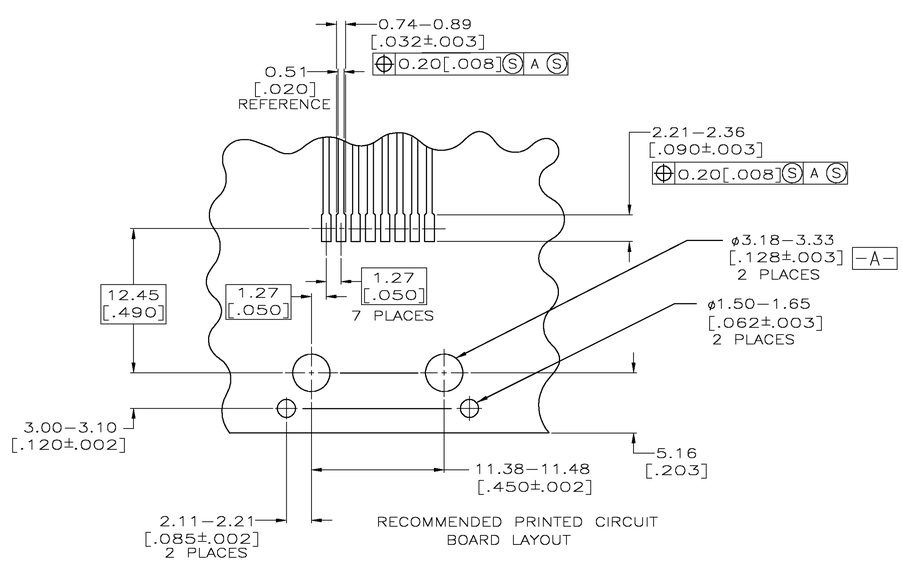

RECOMMENDED PRINTED CIRCUIT BOARD LAYOUT

5 TAPE & REEL	558178–2
TRAY	558178–1
PACKAGING TYPE	PART NO.

DO NOT SCALE PRINT.
UNLESS SPECIFIED
DIMENSIONS IN mm [INCHES]
TOLERANCES ON :
2 PLC DEC ± –
3 PLC DEC ± –
ANGLES ± –

MATERIAL 1

FINISH 1

DR 7–15–93 B. SIMPSON
CHK 7–23–93 C. WHITT
APPD 7–28–93 J. TONEY
APPD 7–28–93 H. MCGRATH
PRODUCT SPEC 108–1163
APPLICATION SPEC 114–6040
WEIGHT –

AMP Incorporated
Harrisburg, PA 17105–3608

NAME
MODULAR JACK ASSEMBLY, 8 POSITION, RIGHT ANGLE, SURFACE MOUNTING, SHIELDED, LOW PROFILE, PRINTED CIRCUIT BOARD GROUND AND PANEL STOPS

SIZE	CAGE CODE	DRAWING NO
D	00779	C-558178
SCALE 4:1		SHEET 1 OF 1

THIS DRAWING IS A CONTROLLED DOCUMENT FOR AMP INCORPORATED. IT IS SUBJECT TO CHANGE AND THE CONTROLLING ENGINEERING ORGANIZATION SHOULD BE CONTACTED FOR THE LATEST REVISION.

CUSTOMER DRAWING

AMP 1756–3 REV 3–92

Transcribed 031216,141348 (YYMMDD,HHMMSS) from Computervision, Inc., Medusa Revision 12.2.5T